BOSCH
Invented for life

G3A Series AutoDome Indoor Systems

- Day/Night, color and B/W versions
- 26x (Day/Night) or 18x optical zoom range +12x digital zoom
- Privacy masking and sector blanking
- Remotely configurable (Bilinx, Bi-Phase, RS-232, RS-485)
- Revolutionary AutoTrack motion tracking option
- Multiple protocols
- Three-year warranty

The AutoDome offers all of the features needed for any indoor surveillance application, from schools to offices, shopping malls to casinos. AutoDome lets you focus on details missed by other cameras.

Functions

The revolutionary AutoTrack feature (optional), built directly into the camera, marks a new generation in motion detection. AutoTrack not only senses movement, but zooms in on the target and follows it, leaving guards hands free for other responsibilities.
Image control and quality are integral aspects of any outdoor surveillance system. The AutoDome offers optical zoom lenses from 18x to 26x, and all systems offer a full 12x digital zoom once the end of the optical zoom is reached. In addition, the patented scaling feature ensures that you have optimal control for viewing at all zoom settings.
Effective surveillance cameras must also perform well under a range of lighting conditions. To enhance sensitivity when night falls, the Day/Night AutoDome automatically switches from color to monochrome by removing the infrared filter. Whether you program the camera to switch automatically, or use the manual switch, the result is optimal camera function, day or night. For ultimate sensitivity, the B/W camera can be used. For operation in the darkest conditions, the slow shutter control feature (standard on all Color and Day/Night AutoDome cameras) automatically reduces the shutter speed to as little as one second. This increases sensitivity by more than 50 times.
To answer concerns about personal privacy, the AutoDome provides sector blanking and privacy masking. These features allow customization to ensure privacy for diverse needs.
Remote control, configuration, and updates can be performed over the video cable (coax or passive UTP) when using Bilinx-compatible control and configuration devices (such as VP-CFGSFT configuration tool or LTC 8016 Allegiant Bilinx Interface)
The menu for these devices can display multiple languages, including: English, French, German, Spanish, Portuguese and Polish.
The following are some of the features that make the AutoDome one of the most flexible domes in the industry. These adjustments can be made by the installer to customize the AutoDome's operation to meet a particular customer's needs.

Rugged Bubble (Option)

- Rugged Bubbles are made from 3 mm thick Polycarbonate, designed to meet stringent strength standards without compromising optical clarity.

- The Bubble, by itself, can withstand a 100 foot-pound impact. This energy is equivalent to that of a 10 lb sledgehammer dropped from a height of 10 feet.
- The Bubble, installed in the Dome, exceeds the UL 1598 horizontal impact standard for lighting fixtures, by a factor of 10.

Camera Commands

- Picture quality settings such as **White Balance** and **Sharpness**.
- **Max. Gain:** When Automatic Gain Control (AGC) is on, the AutoDome allows selection of a specific **maximum** setting that the AGC can achieve, limiting graininess of the picture. The camera automatically adjusts to very low-light situations.
- **Slow Shutter (Frame Integration):** By slowing the shutter speed, the camera's sensitivity increases, resulting in visibility at much lower light levels. Available settings are **fully automatic**, or one of six specific shutter speeds.
- **Digital Zoom:** A full 12x digital zoom can be utilized once the maximum optical zoom has been reached. If digital zoom is not desired, it can be disabled.

Day/Night Commands

- **Night Mode:** This feature switches the camera from Color to Monochrome and removes the IR filter, thus increasing the camera's sensitivity in low light applications. Settings are **on**, **off**, or **fully automatic**.
- **Night Mode Threshold:** When set to **automatic**, this feature determines the light level at which the camera will switch to night mode.

Dome Commands

- **Sector Blanking**: Video blanking in up to 16 specified sectors within the total field-of-view.
- **Privacy Masking**: Up to six areas can be masked from visibility.
- **Guard Tours**: There are two styles of Guard Tours:
  - The **preset tour** has capability for up to 99 presets, which can either be included or excluded from the tour. The dwell time can be specified, whereupon each of the included presets will be visited consecutively. This tour continues until operator intervention.
  - Two **Recorded tours** are available, which have a combined duration of 15 minutes of movements. These are recorded **macros** of an operator's movements, including Pan, Tilt, and Zoom activities, and can be **played back** in a continuous manner. This creates a smoother and more thorough type of automated tour.
- **Inactivity**: When an operator stops manual control of a dome, the inactivity option determines what the dome should do next, if anything. The options are as follows: return to a specific preset, **return to the automated tour previously executed**, or **do nothing**. The installer can determine the duration of the inactivity period.
- **Password Control**: This feature allows the installer to determine the security level of dome commands. Available settings are as follows:
  - **Low**: any user can access any option.
  - **Medium**: a published command unlocks the commands
  - **High**: a four digit, modifiable password is required to unlock the commands.

Installation/Configuration Notes

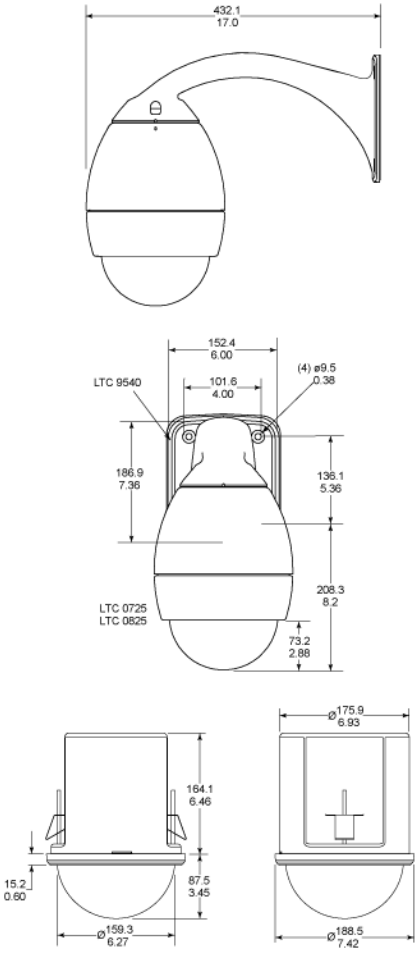

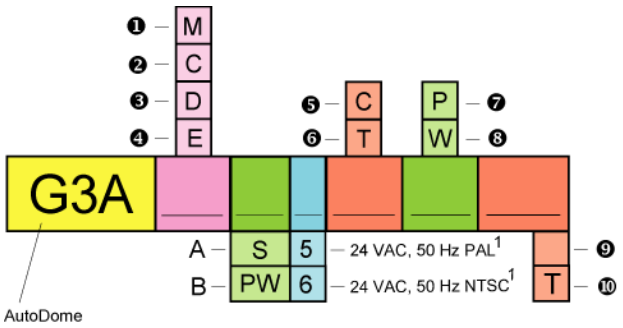

01 18x Monochrome
- Note: This option is available only in the Americas.

02 18x Color

03 18x Day/Night

04 26x Day/Night

05 Clear

06 Tint

07 Pipe[2]

08 Wall[2]

09 Standard

10 Autotrack[3]

A Suspended Ceiling

B Pendant White

1. No transformer included. Customer must supply either a 24 VAC, 50 W (ENV-PSU or equivalent). Not available with fiber optic option.
2. Wall and pipe mount kits only apply to pendant models.
3. Tracker not available on Monochrome models.

Technical Specifications

Camera 18x Color/18x Day/Night

Imager	1/4 in. Exview HAD CCD	
	(752 x 582 PAL)/(768 x 494 NTSC)	
Lens	18x Zoom (4.1–73.8 mm) F1.4 to F3.0	
Focus	Automatic with manual override	
Iris	Automatic with manual override	
Field of View	2.7° to 48°	
Video Output	1.0 Vp-p, 75 Ohm	
Gain Control	Off/Auto (with adjustable limit)	
Synchronization	Line-lock (–120° to 120° vertical phase adjust) or internal crystal	
Aperture Correction	Horizontal and vertical	
Digital Zoom	12x	
Horizontal Resolution	470 TVL (NTSC)/460 TVL (PAL)	
Sensitivity (Minimum Usable Video: 20 IRE)	**18x Color**	**18x Day/Night**
Day Mode w/Slow Shutter Off	0.25 lux	0.25 lux
Night Mode w/Slow Shutter Off	—	0.031 lux
Day Mode w/Slow Shutter On	0.0033 lux	0.0033 lux
Night Mode w/Slow Shutter On	—	0.0005 lux
Sensitivity (Usable Video: 50 IRE)	**18x Color**	**18x Day/Night**
Day Mode w/Slow Shutter Off	0.7 lux	0.7 lux
Night Mode w/Slow Shutter Off	—	0.166 lux
Day Mode w/Slow Shutter On	0.0082 lux	0.0082 lux
Night Mode w/Slow Shutter On	—	0.0013 lux
SNR	>50 dB	
White Balance	2000 K to 10,000 K	

Camera 26x Day/Night

Imager	1/4 in. Exview HAD CCD
	(752 x 582 PAL)/(768 x 494 NTSC)
Lens	26x Zoom (3.5–91.0 mm) F1.6 to F3.8
Focus	Automatic with manual override
Iris	Automatic with manual override
Field of View	2.3° to 55°
Video Output	1.0 Vp-p, 75 Ohm
Gain Control	Off/Auto (with adjustable limit)
Synchronization	Line-lock (–120° to 120° vertical phase adjust) or internal crystal

Aperture Correction	Horizontal and vertical
Digital Zoom	12X
Horizontal Resolution	470 TVL (NTSC)/460 TVL (PAL)
Sensitivity (Usable Video: 20 IRE, F1.6)	
Day Mode w/Slow Shutter Off	0.33 lux
Night Mode w/Slow Shutter Off	0.066 lux
Day Mode w/Slow Shutter On	0.0103 lux
Night Mode w/Slow Shutter On	0.0021 lux
Sensitivity (Usable Video: 50 IRE, F1.6)	
Day Mode w/Slow Shutter Off	1 lux
Night Mode w/Slow Shutter Off	0.26 lux
Day Mode w/Slow Shutter On	0.026 lux
Night Mode w/Slow Shutter On	0.0052 lux
SNR	>50 dB
White Balance	2000 K to 10,000 K

Camera 18x Monochrome

Imager	1/4 in. Exview HAD CCD
	(752 x 582 CCIR)/(768 x 494 EIA)
Lens	18X Zoom (4.1 mm–73.8 mm) F1.4 to F3.0
Focus	Automatic with manual override
Iris	Automatic with manual override
Field of View	2.7° to 48°
Video Output	1.0 Vp-p, 75 Ohm
Gain Control	Off/Auto (with adjustable limit)
Synchronization	Line-lock (–120° to 120° vertical phase adjust) or internal crystal
Aperture Correction	Horizontal and vertical
Digital Zoom	12x
Horizontal Resolution	520 TVL (typical)
Sensitivity (Minimum Usable Video: 20 IRE)	0.031 lux
Sensitivity (Minimum Usable Video: 50 IRE)	0.1 lux
SNR	>50 dB
White Balance	N/A

Mechanical

Model	**Pendant**
Weight	3.6 kg (b)
Pan/Tilt	360° Continuous pan, –5° to 90° tilt from horizontal plane
Pre-position Speed	360°/sec., ±0.50° accuracy
Variable Speed	120°/sec.
Model	In-ceiling
Weight	2.7 kg (6 lb)
Pan/Tilt	360° Continuous pan, –5° to 90° tilt from horizontal plane
Pre-position Speed	360°/sec., ±0.50° accuracy
Variable Speed	120°/sec.

Environmental

Model	**Pendant**
Design Rating	IP54 (NEMA 3)
Operating Temp	–10°C to 50°C (14°F to 122°F)
Storage Temp	–10°C to 60°C (14°F to 140°F)
Humidity	0% to 90% relative, non-condensing
Model	**In-ceiling**
Design Rating	Meets plenum rating

Miscellaneous

Sectors/Titling	16 independent sectors with 16-character titles/sector
Camera Setup/Control	Bi-Phase or RS-232, RS-485, Bilinx (coax)
Communications protocols	Bi-Phase, Bilinx, Pelco P, and Pelco D
Pre-positions	99, Each with 16-character titles
Guard Tours	Two (2) types of tours: • Recorded tours - two (2), with a total duration of 15 minutes • Preset tour - one (1), consisting of up to 99 consecutive scenes
Addressing	FastAddress remote addressing or four (4) digit thumbwheel
Supported Languages	English, French, German, Spanish, Portuguese, and Polish
Agency Listings	CE, UL
User Connections	
Power (Camera)	21–28 VAC, 50/60 Hz; 15 W max.
Bi-Phase ±	Control Data
RS-232 RX/TX or RS-485 ±	Optional control data (dip switch selectable)
Video	BNC
Alarm inputs (4)	Programmable for "Normally Open" or "Normally Closed"
Relay out (1)	Dry contact output rating: 2 A @ 30 VAC

Optional Power Supplies

	120 VAC–28 VAC, 60 Hz (Multi channel, non-isolated)
Models:	
G3A-PSU1-4	Four (4) Dome supply
G3A-PSU1-8	Eight (8) Dome supply
G3A-PSU1-16	16 Dome supply

Dimensions	4 Dome	8 and 16 Dome
Length	21 cm (8.5 in.)	28.5 cm (11.5 in.)
Height	23.5 cm (9.5 in.)	29 cm (11.25 in.)
Width	9.5 cm (3.75 in.)	9 cm (3.5 in.)
Configuration Tool Software		
VP-CFGSFT	Configuration software w/USB adapter	
VP-USB	USB-coax adapter only	

Ordering Information

G3ACS5C Color AutoDome Kit 18x color, indoor drop ceiling, clear dome, 24 VAC, 50 Hz	899380044171
G3ACS5T Color AutoDome Kit 18x color, indoor drop ceiling, tinted dome, 24 VAC, 50 Hz	899380044181
G3ACS5CT Color AutoDome Kit 18x color, AutoTrack, indoor drop ceiling, clear dome, 24 VAC, 50 Hz	899380052791
G3ACS5TT Color AutoDome Kit 18x color, AutoTrack, indoor drop ceiling, tinted dome, 24 VAC, 50 Hz	899380052801
G3ACPW2CW Color AutoDome Kit 18x color, indoor pendant, wall mount, clear dome, white, 230 VAC, 50 Hz	899380046301
G3ACPW2TW Color AutoDome Kit 18x color, indoor pendant, wall mount, tinted dome, white, 230 VAC, 50 Hz	899380046311
G3ACPW5CP Color AutoDome Kit 18x color, indoor pendant, pipe mount, clear dome, white, 24 VAC, 50 Hz	899380044091
G3ACPW5TW Color AutoDome Kit 18x color, indoor pendant, wall mount, tinted dome, white, 24 VAC, 50 Hz	899380044121
G3ACPW5CW Color AutoDome Kit 18x color, indoor pendant, wall mount, clear dome, white, 24 VAC, 50 Hz	899380044101
G3ACPW5TP Color AutoDome Kit 18x color, indoor pendant, pipe mount, tinted dome, white, 24 VAC, 50 Hz	899380044111
G3ACPW2CWT Color AutoDome Kit 18x color, AutoTrack, indoor pendant, wall mount, clear dome, white, 230 VAC, 50 Hz	899380052811
G3ACPW5CPT Color AutoDome Kit 18x color, AutoTrack, indoor pendant, pipe mount, clear dome, white, 24 VAC, 50 Hz	899380052751
G3ACPW2TWT Color AutoDome Kit 18x color, AutoTrack, indoor pendant, wall mount, tinted dome, white, 230 VAC, 50 Hz	899380052821
G3ACPW5TPT Color AutoDome Kit 18x color, AutoTrack, indoor pendant, pipe mount, tinted dome, white, 24 VAC, 50 Hz	899380052771
G3ACPW5TWT Color AutoDome Kit 18x color, AutoTrack, indoor pendant, wall mount, tinted dome, 24 VAC, 50 Hz	899380052781

Ordering Information

G3ACPW5CWT Color AutoDome Kit 18x color, AutoTrack, indoor pendant, wall mount, clear dome, white, 24 VAC, 50 Hz	899380052761
G3ADS5C Day/Night AutoDome Kit 18x day/night, indoor drop ceiling, clear dome, 24 VAC, 50 Hz	899380044371
G3ADS5T Day/Night AutoDome Kit 18x day/night, indoor drop ceiling, tinted dome, 24 VAC, 50 Hz	899380044381
G3ADS5CT Day/Night AutoDome Kit 18x day/night, AutoTrack, indoor drop ceiling, clear dome, 24 VAC, 50 Hz	899380052931
G3ADS5TT Day/Night AutoDome Kit 18x day/night, AutoTrack, indoor drop ceiling, tinted dome, 24 VAC, 50 Hz	899380052941
G3ADPW2CW Day/Night AutoDome Kit 18x day/night, indoor pendant, wall mount, clear dome, white, 230 VAC, 50 Hz	899380046321
G3ADPW2TW Day/Night AutoDome Kit 18x day/night, indoor pendant, wall mount, tinted dome, white, 230 VAC, 50 Hz	899380046331
G3ADPW5CP Day/Night AutoDome Kit 18x day/night, indoor pendant, pipe mount, clear dome, white, 24 VAC, 50 Hz	899380044291
G3ADPW5CW Day/Night AutoDome Kit 18x day/night, indoor pendant, wall mount, clear dome, white, 24 VAC, 50 Hz	899380044301
G3ADPW5TP Day/Night AutoDome Kit 18x day/night, indoor pendant, pipe mount, tinted dome, white, 24 VAC, 50 Hz	899380044311
G3ADPW5TW Day/Night AutoDome Kit 18x day/night, indoor pendant, wall mount, tinted dome, white, 24 VAC, 50 Hz	899380044321
G3ADPW2CWT Day/Night AutoDome Kit 18x day/night, AutoTrack, indoor pendant, wall mount, clear dome, white, 230 VAC, 50 Hz	899380052951
G3ADPW2TWT Day/Night AutoDome Kit 18x day/night, AutoTrack, indoor pendant, wall mount, tinted dome, white, 230 VAC, 50 Hz	899380052961
G3ADPW5CPT Day/Night AutoDome Kit 18x day/night, AutoTrack, indoor pendant, pipe mount, clear dome, white, 24 VAC, 50 Hz	899380052891
G3ADPW5CWT Day/Night AutoDome Kit 18x day/night, AutoTrack, indoor pendant, wall mount, clear dome, white, 24 VAC, 50 Hz	899380052901
G3ADPW5TPT Day/Night AutoDome Kit 18x day/night, AutoTrack, indoor pendant, pipe mount, tinted dome, white, 24 VAC, 50 Hz	899380052911
G3ADPW5TWT Day/Night AutoDome Kit 18x day/night, AutoTrack, indoor pendant, wall mount, tinted dome, white, 24 VAC, 50 Hz	899380052921
G3AES5C Day/Night AutoDome Kit 26x day/night, indoor drop ceiling, clear dome, 24 VAC, 50 Hz	899380058481
G3AES5T Day/Night AutoDome Kit 26x day/night, indoor drop ceiling, tinted dome, 24 VAC, 50 Hz	899380058491

Ordering Information

G3AES5CT Day/Night AutoDome Kit 26x day/night, AutoTrack, indoor drop ceiling, clear dome, 24 VAC, 50 Hz	899380058621
G3AES5TT Day/Night AutoDome Kit 26x day/night, AutoTrack, indoor drop ceiling, tinted dome, 24 VAC, 50 Hz	899380058631
G3AEPW5CP Day/Night AutoDome Kit 26x day/night, indoor pendant, pipe mount, clear dome, white, 24 VAC, 50 Hz	899380058541
G3AEPW5CW Day/Night AutoDome Kit 26x day/night, indoor pendant, wall mount, clear dome, white, 24 VAC, 50 Hz	899380058551
G3AEPW2CW Day/Night AutoDome Kit 26x day/night, indoor pendant, wall mount, clear dome, white, 230 VAC, 50 Hz	899380058581
G3AEPW5TP Day/Night AutoDome Kit 26x day/night, indoor pendant, pipe mount, tinted dome, white, 24 VAC, 50 Hz	899380058561
G3AEPW5TW Day/Night AutoDome Kit 26x day/night, indoor pendant, wall mount, tinted dome, white, 24 VAC, 50 Hz	899380058571
G3AEPW2TW Day/Night AutoDome Kit 26x day/night, indoor pendant, wall mount, tinted dome, white, 230 VAC, 50 Hz	899380058591
G3AEPW5CPT Day/Night AutoDome Kit 26x day/night, AutoTrack, indoor pendant, pipe mount, clear dome, white, 24 VAC, 50 Hz	899380058781
G3AEPW5CWT Day/Night AutoDome Kit 26x day/night, AutoTrack, indoor pendant, wall mount, clear dome, white, 24 VAC, 50 Hz	899380058791
G3AEPW5TPT Day/Night AutoDome Kit 26x day/night, AutoTrack, indoor pendant, pipe mount, tinted dome, white, 24 VAC, 50 Hz	899380058801
G3AEPW5TWT Day/Night AutoDome Kit 26x day/night, AutoTrack, indoor pendant, wall mount, tinted dome, white, 24 VAC, 50 Hz	899380058811
G3AEPW2CWT Day/Night AutoDome Kit 26x day/night, AutoTrack, indoor pendant, wall mount, clear dome, white, 230 VAC, 50 Hz	899380058821
G3AEPW2TWT Day/Night AutoDome Kit 26x day/night, AutoTrack, indoor pendant, wall mount, tinted dome, white, 230 VAC, 50 Hz	899380058831
LTC0729/15C G3 Black/WhiteCamera Module 18x B/W, indoor drop ceiling mount, 24 VAC, 50 Hz	899380048621
LTC0825/15C G3 Color Camera Module 18x color, indoor pendant mount, clear bubble, white, 24 VAC, 50 Hz	899380048761
LTC0825/17C G3 Color Camera Module 18x color, indoor pendant mount, tinted bubble, white, 24 VAC, 50 Hz	899380048771
LTC0829/15C G3 Color Camera Module 18x color, indoor drop ceiling mount, 24 VAC, 50 Hz	899380048631

Ordering Information

LTC0925/15C G3 Day/Night Camera Module 18x day/night, indoor pendant mount, clear bubble, white, 24 VAC, 50 Hz	8993 800 48781
LTC0925/17C G3 Day/Night Camera Module 18x day/night, indoor pendant mount, tinted bubble, white, 24 VAC, 50 Hz	899380048791
LTC0929/15C G3 Day/Night Camera Module 18x day/night, indoor drop ceiling mount, 24 VAC, 50 Hz	899380048641
LTC0935/15C G3 Day/Night Camera Module 25x day/night, indoor pendant mount, clear bubble, white, 24 VAC, 50 Hz	899380048801
LTC0935/17C G3 Day/Night Camera Module 25x day/night, indoor pendant mount, tinted bubble, white, 24 VAC, 50 Hz	899380048811
LTC0939/15C G3 Day/Night Camera Module 25x day/night, indoor drop ceiling mount, 24 VAC, 50 Hz	899380048651
LTC7490/20C G3 Backbox indoor drop ceiling mount, 24 VAC, 50 Hz	899380050691
LTC 0949/15C G3 Day/Night Camera Module 26x day/night, indoor drop ceiling module, 24 VAC, 50 Hz	899380058311
LTC0725/15C G3 Black/White Camera Module 18x B/W, indoor pendant mount, clear bubble, white, 24 VAC, 50 Hz	899380048741
LTC0725/17C G3 Black/White Camera Module 18x B/W, indoor pendant mount, tinted bubble, white, 24 VAC, 50 Hz	899380048751
LTC 0945/15C G3 Day/Night Camera Module 26x day/night, indoor pendant mount, clear bubble, white, 24 VAC, 50 Hz	899380058261
LTC 0945/17C G3 Day/Night Camera Module 26x day/night, indoor pendant mount, tinted, bubble, white, 24 VAC, 50 Hz	899380058281

Hardware Accessories

TC 220PSX-24 Power Supply Unit 230 VAC/20 VAC, 50 Hz, 20 VA	899380014991

Americas:
Bosch Security Systems
130 Perinton Parkway
Fairport, New York, 14450, USA
Phone: +1 585 223 4060
Fax: +1 800 289 0096
security.sales@us.bosch.com
www.boschsecurity.us

Europe, Middle East, Africa:
Bosch Security Systems B.V.
P.O. Box 80002
5600 JB Eindhoven, The Netherlands
Phone: +31 40 27 83955
Fax: +31 40 27 86668
emea.securitysystems@bosch.com
www.boschsecurity.com

Asia-Pacific:
Bosch Security Systems Pte Ltd
38C Jalan Pemimpin
Singapore 577180
Phone: +65 6319 3450
Fax: +65 6319 3499
apr.securitysystems@bosch.com
www.boschsecurity.com

Represented by

© Bosch Security Systems 2006 | Data subject to change without notice
F2140498955 | Cur: en-US, V2, 19 Jan 2006 | DocNo. 9498 961 83411